Worksheet 03 01 01: **Reflection about a Plane** Name:

A solid is reflected about a given plane. Determine the reflected image of the solid – use given scaffold of a cube.
Show proper visibility. Hatch all parallel visible faces with the same colour.
Check your result: Use a CAD software to show the given solid and its reflected image.

i)

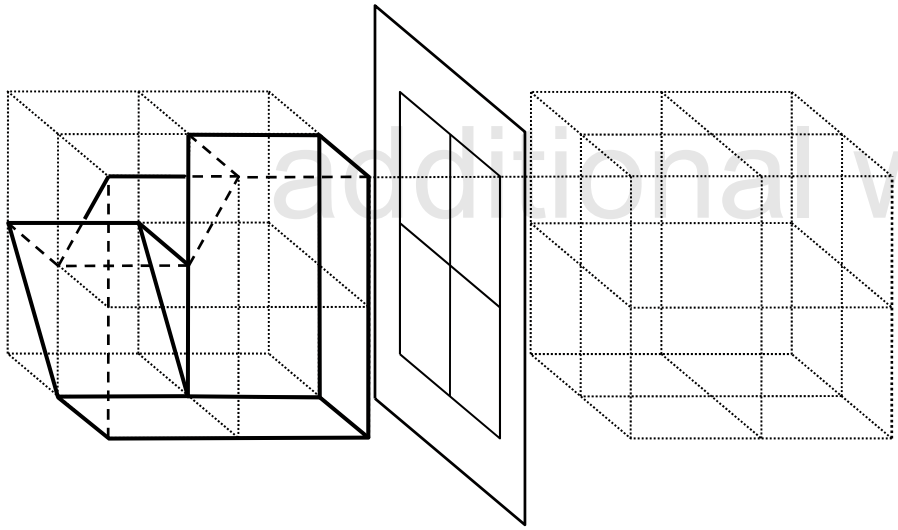

j)

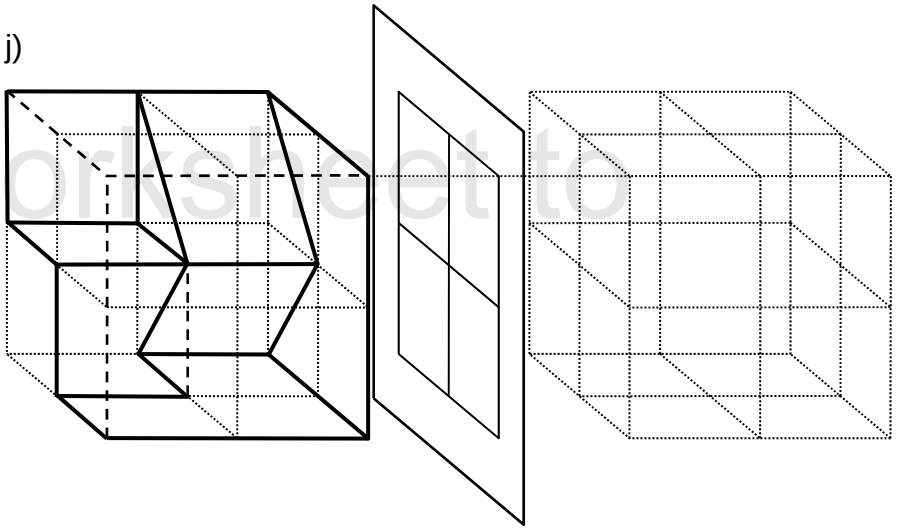

additional worksheet to

DARSTELLENDE GEOMETRIE
3D-GEOMETRY

k)

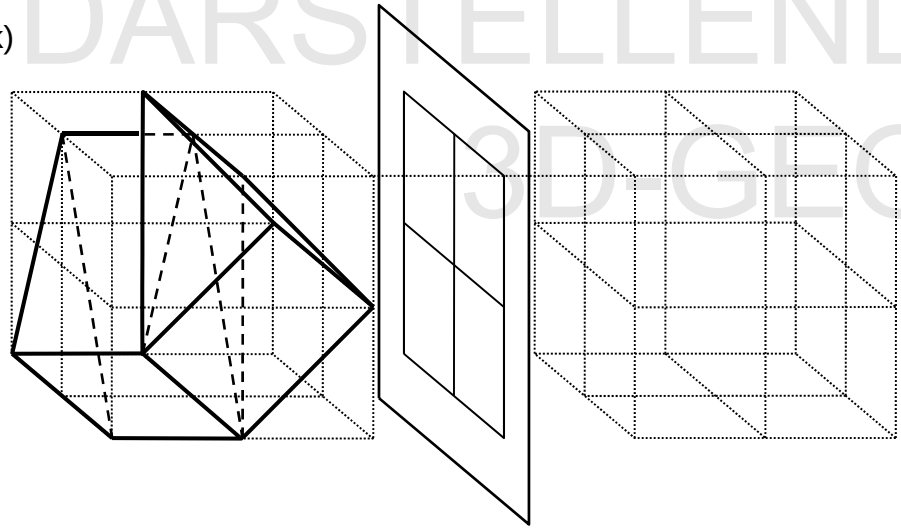
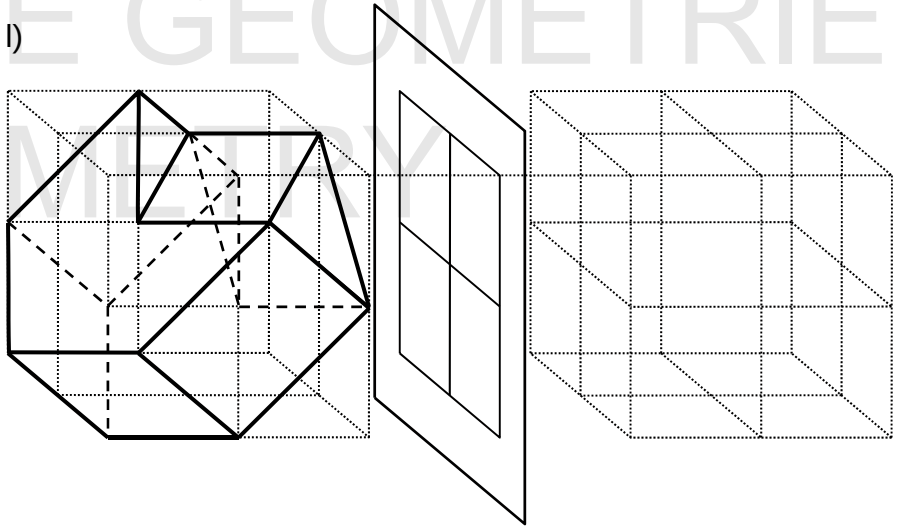
l)